Installation Manual for SCSBDH3080

CAL-ROYAL PRODUCTS, INC. USA

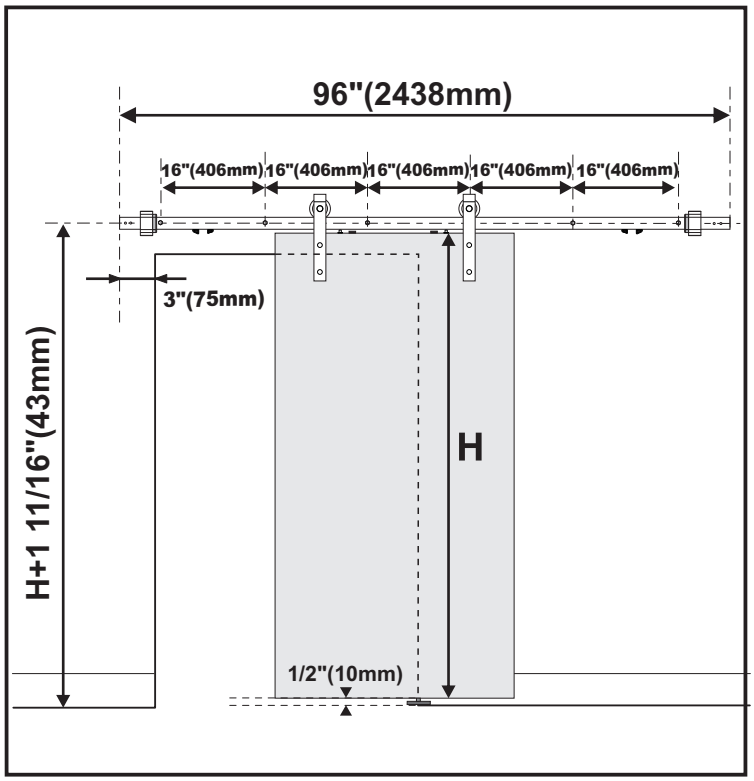

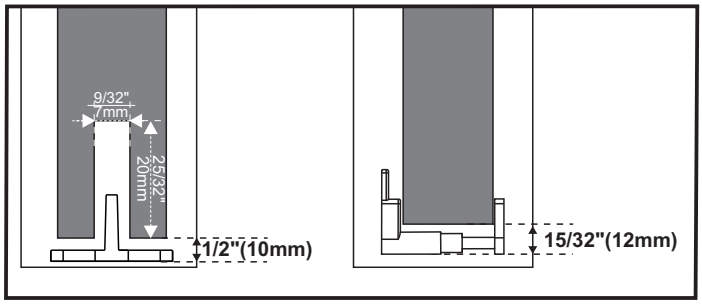

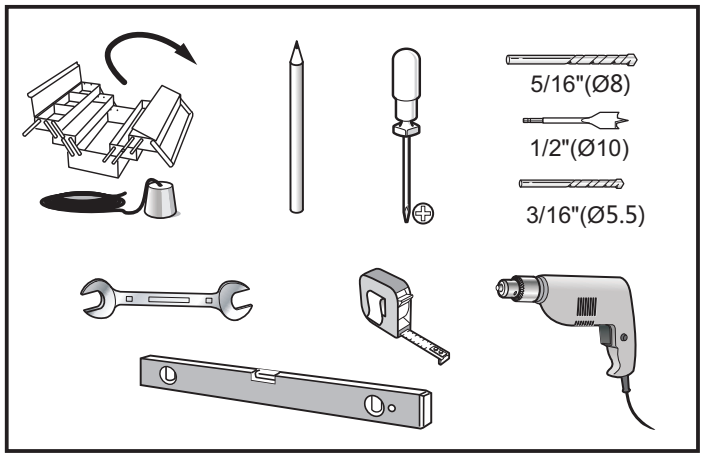

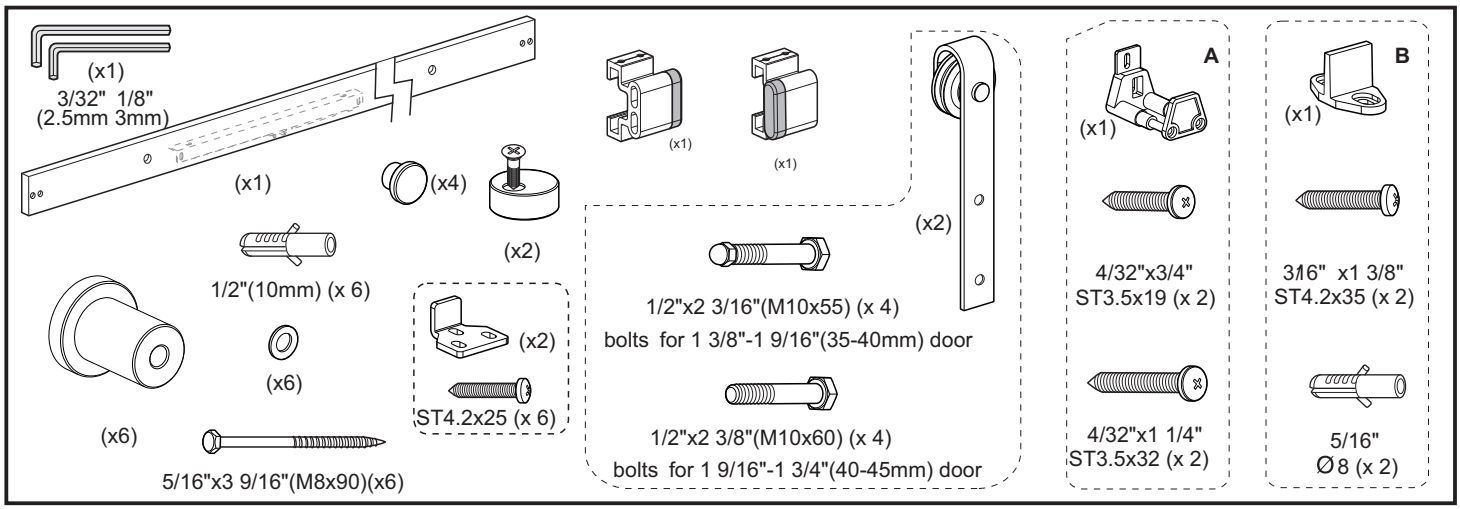

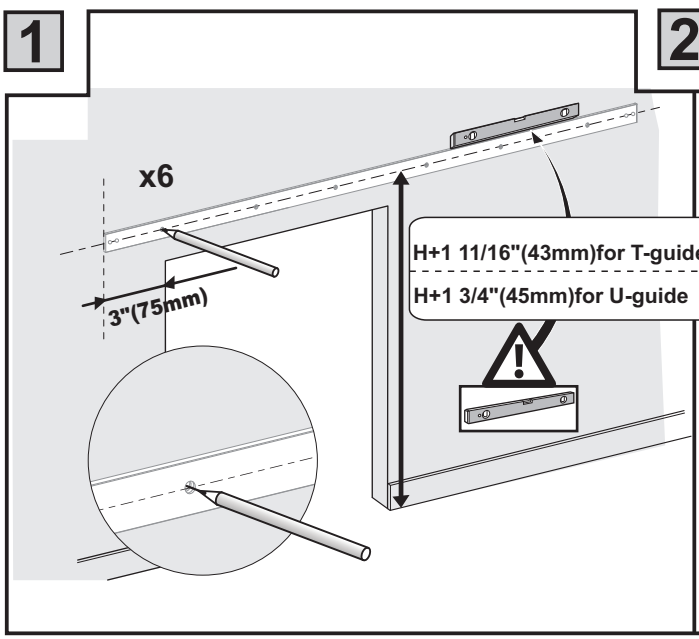

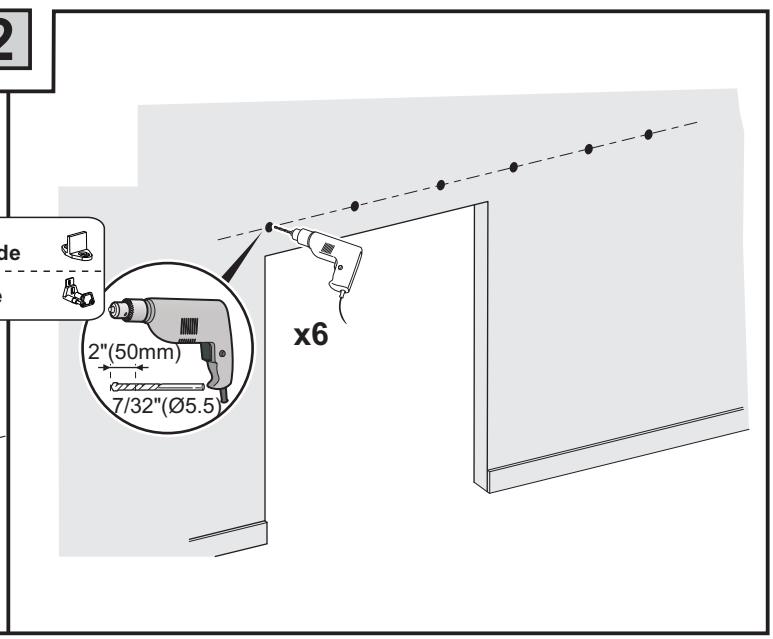

3

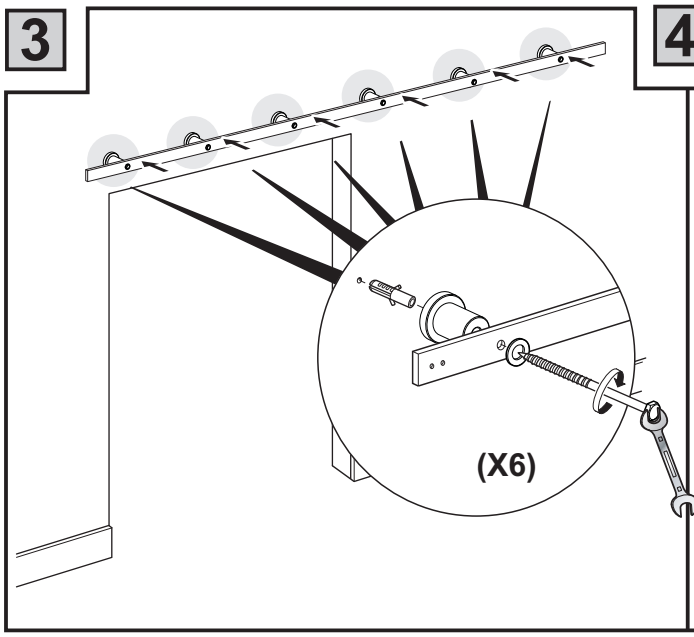
(X6)

4

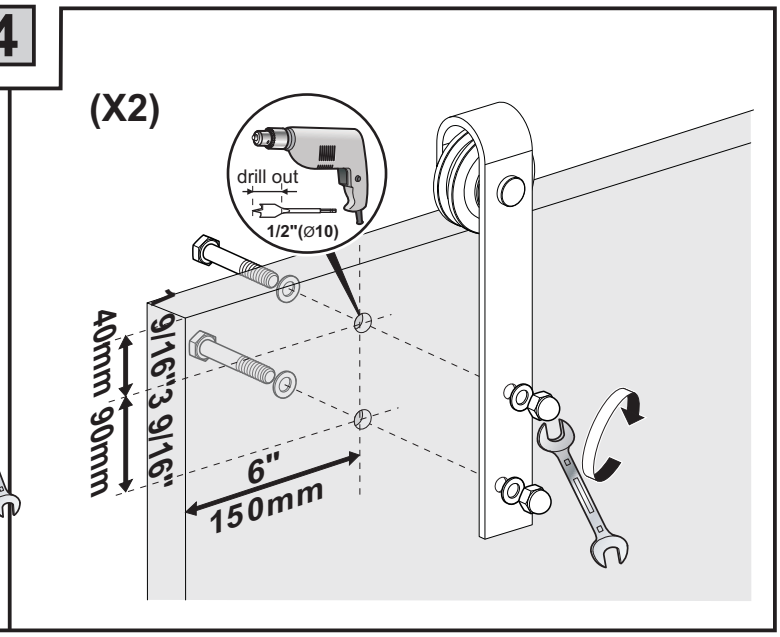
(X2)
drill out
1/2"(Ø10)
1 9/16"
40mm
3 9/16"
90mm
6"
150mm

5

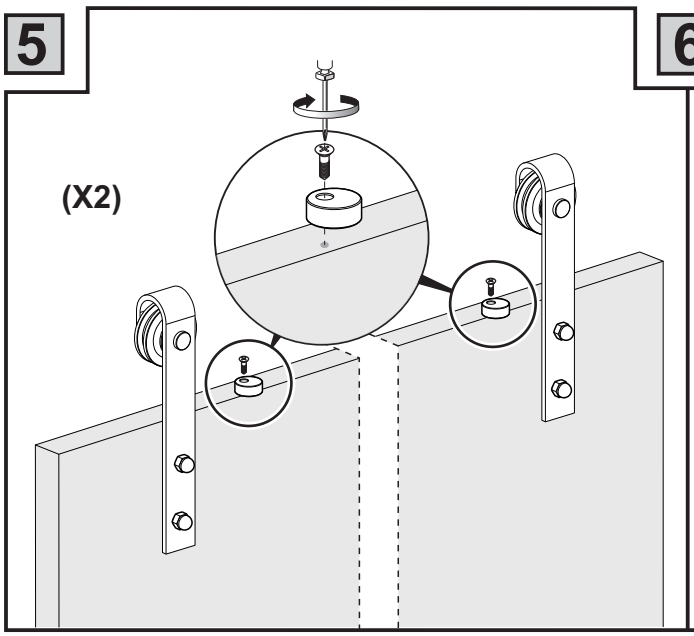
(X2)

6

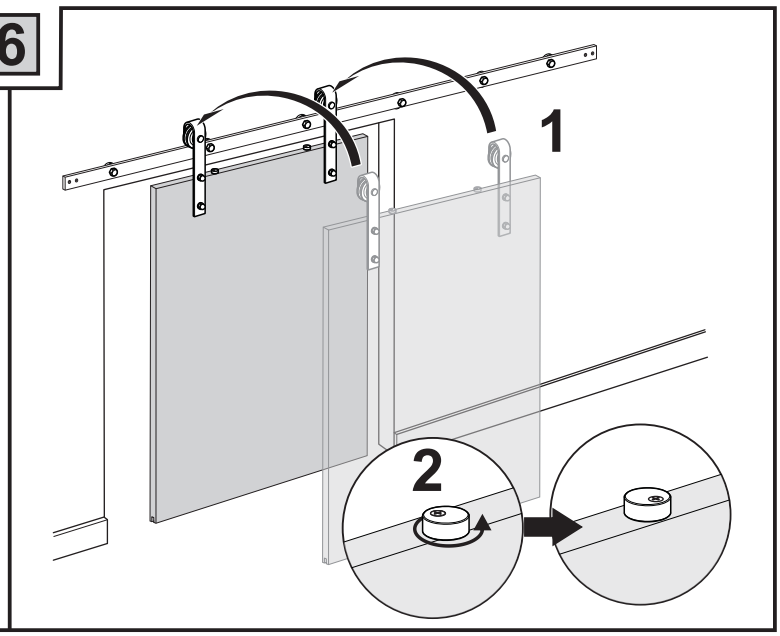
1
2

7

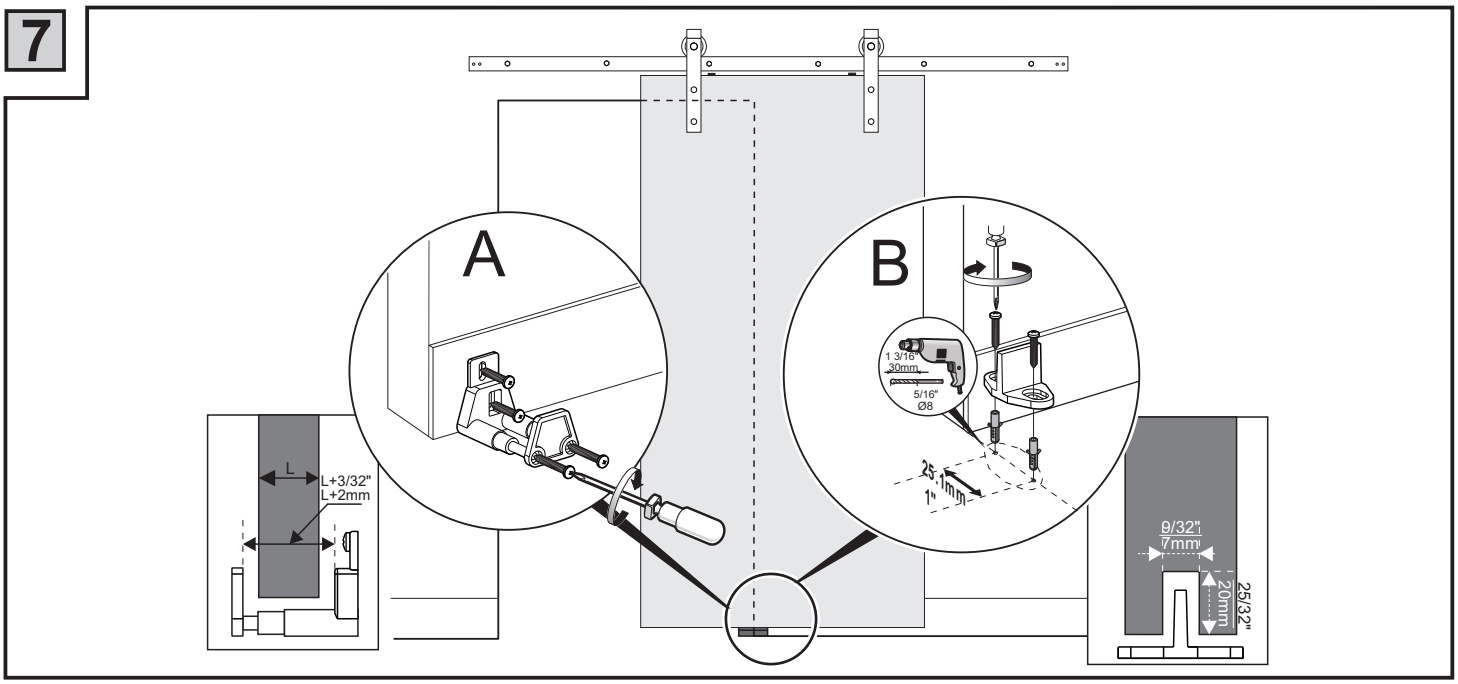
A
B
L
L+3/32"
L+2mm
1 3/16"
30mm
5/16"
Ø8
25.1mm
1"
9/32"
7mm
20mm
25/32"

8

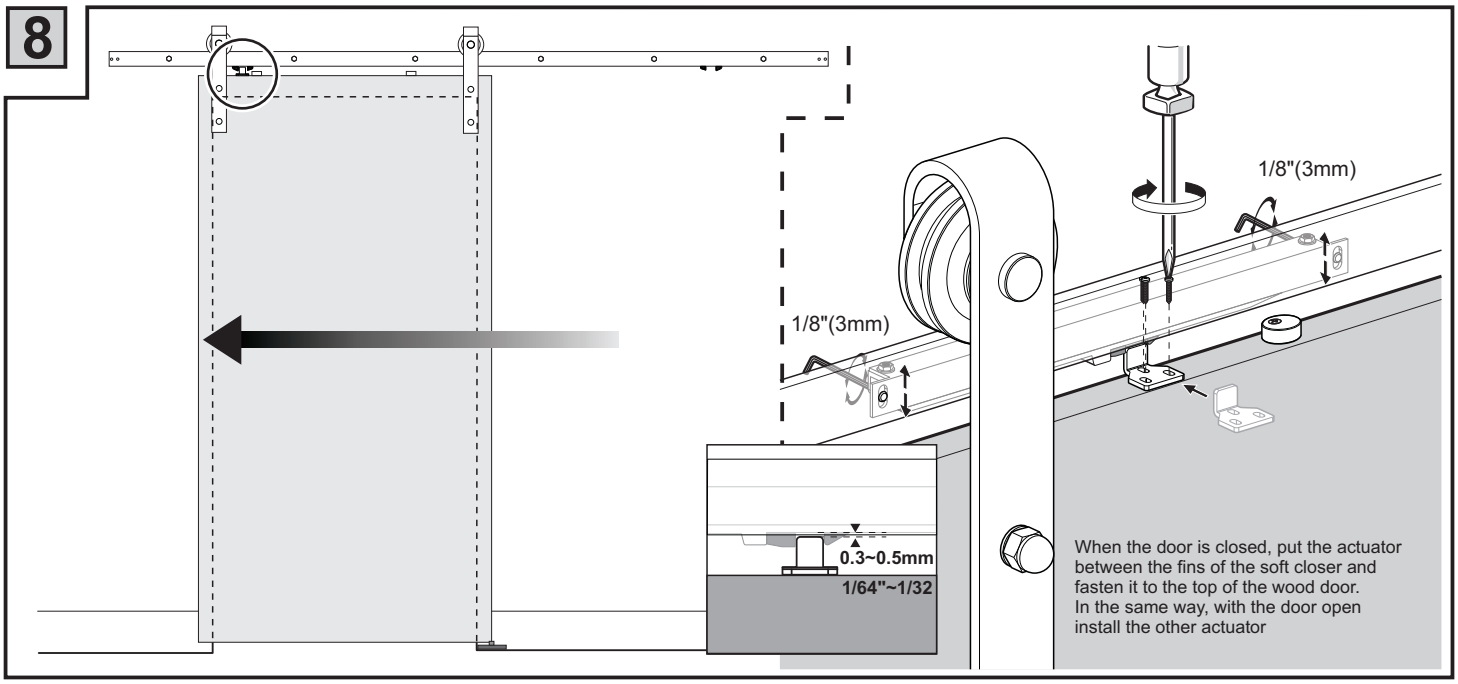
1/8"(3mm)
1/8"(3mm)
0.3~0.5mm
1/64"~1/32
When the door is closed, put the actuator between the fins of the soft closer and fasten it to the top of the wood door.
In the same way, with the door open install the other actuator

9

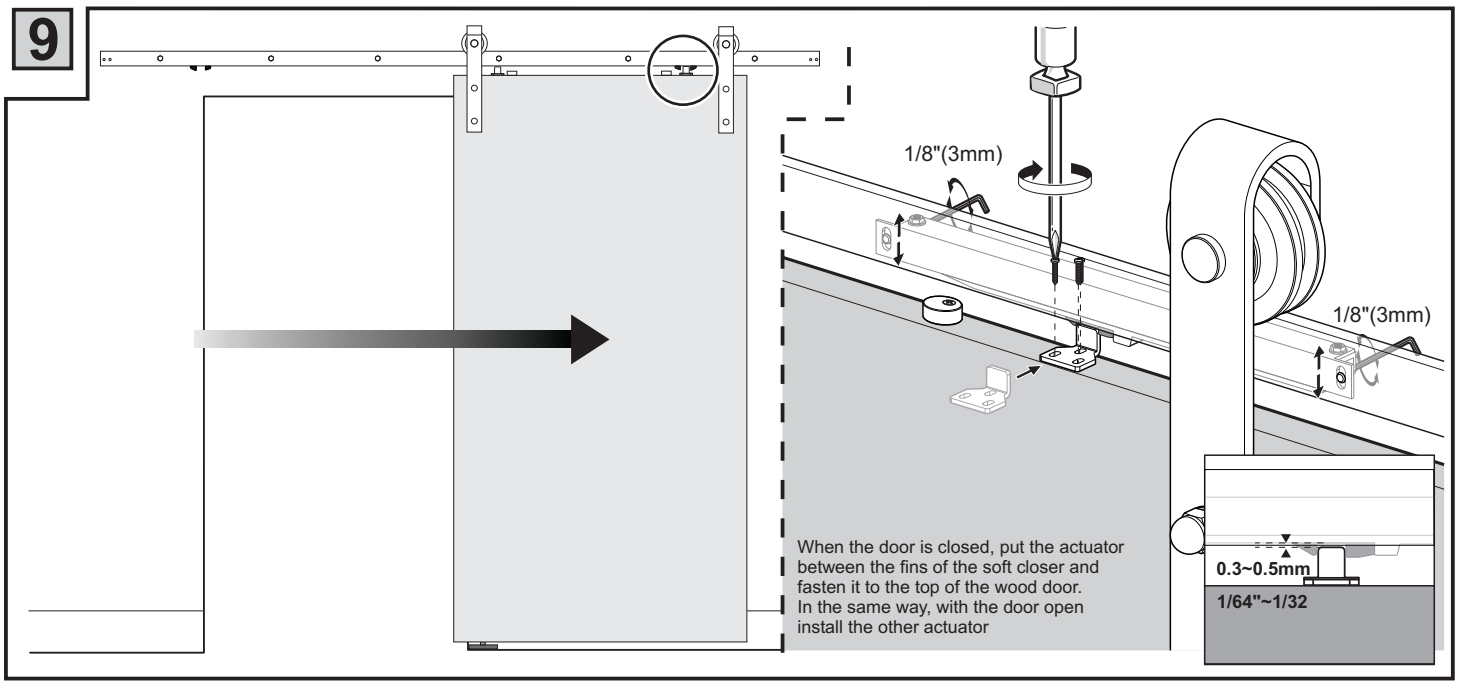
1/8"(3mm)
1/8"(3mm)
0.3~0.5mm
1/64"~1/32
When the door is closed, put the actuator between the fins of the soft closer and fasten it to the top of the wood door.
In the same way, with the door open install the other actuator

10

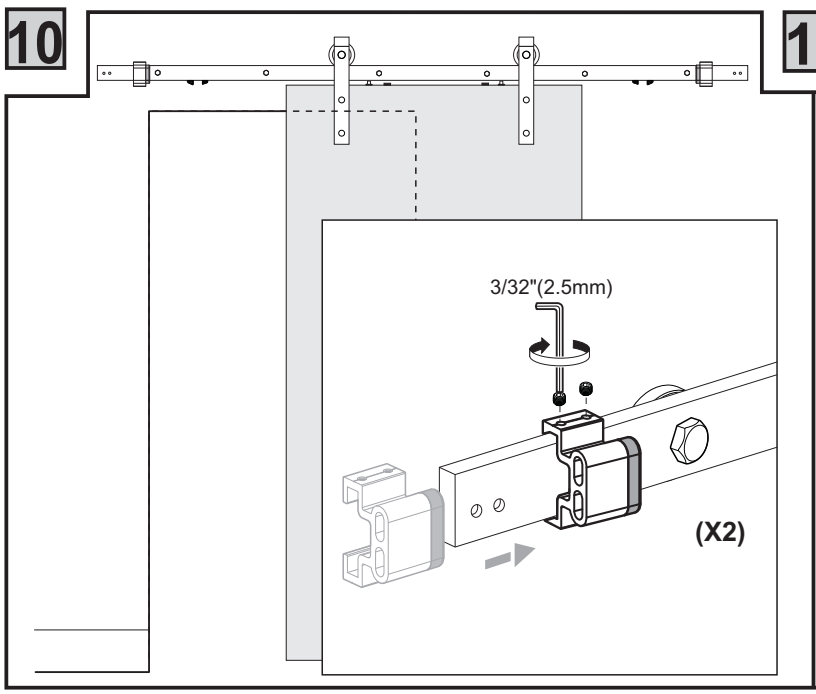
3/32"(2.5mm)
(X2)

11

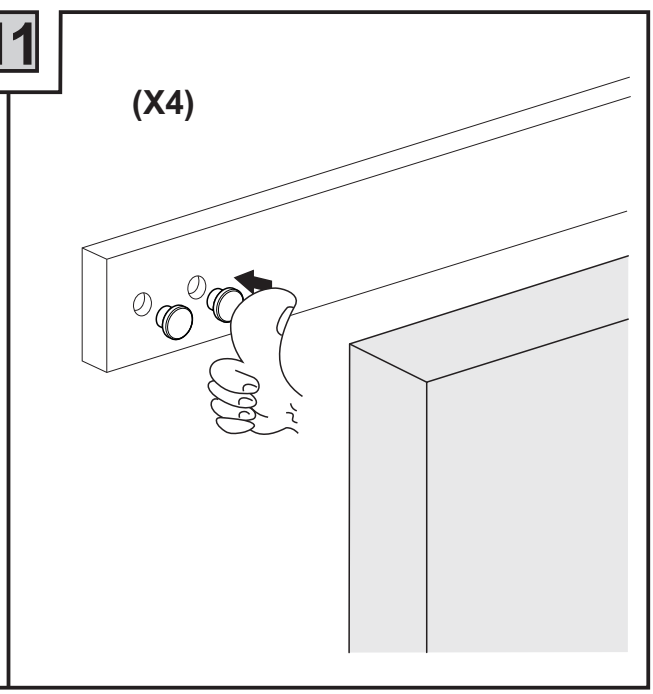
(X4)