Installation manual for SDH2082

CAL-ROYAL PRODUCTS, INC. USA

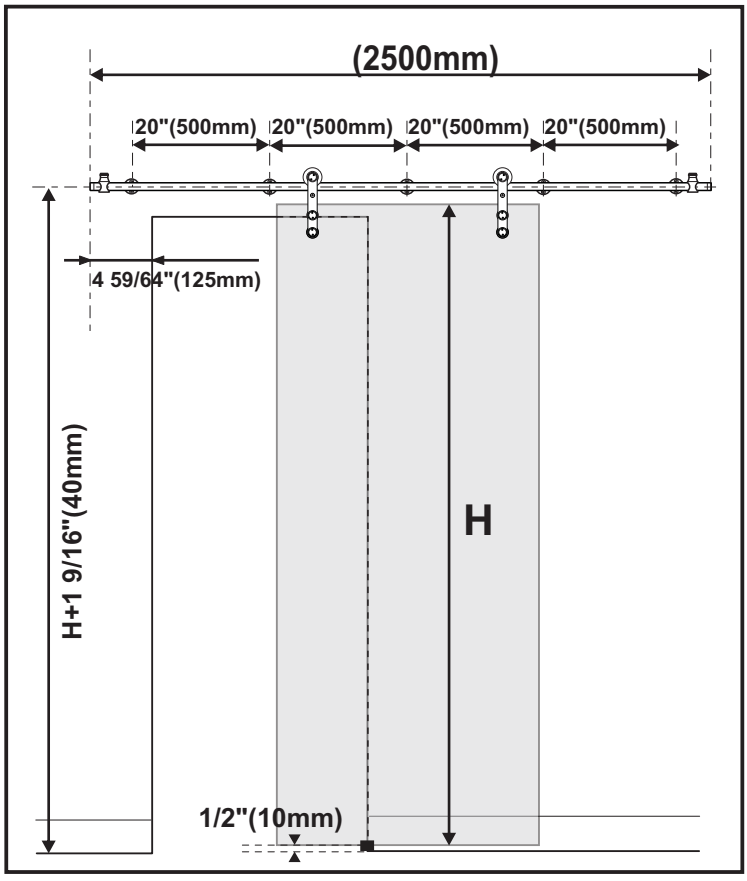

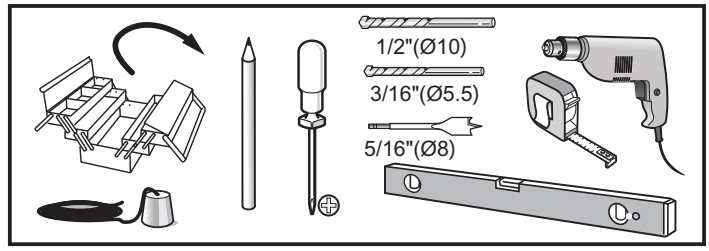

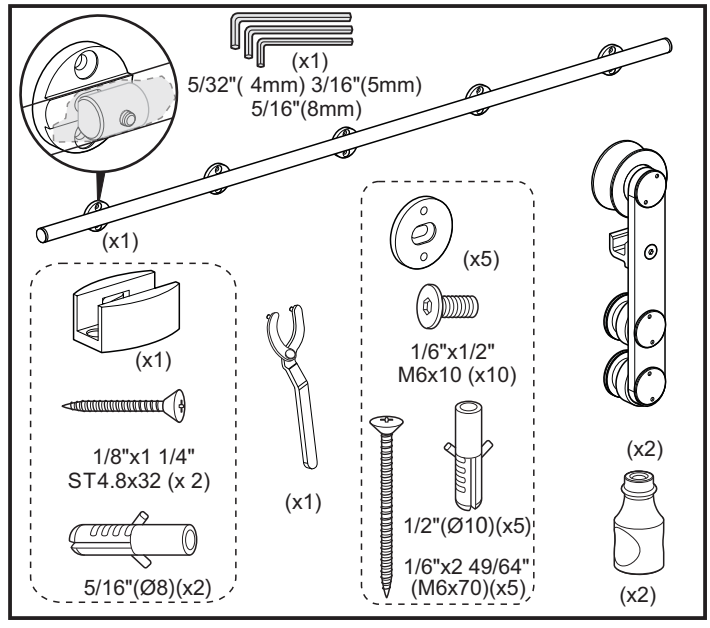

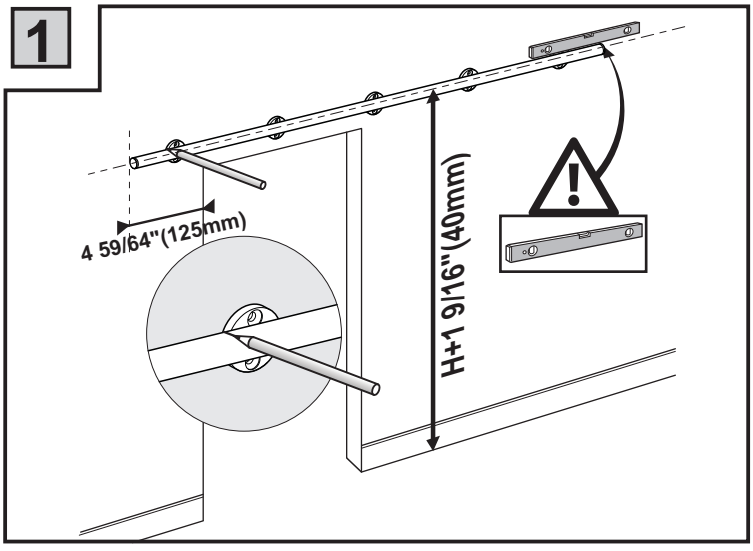

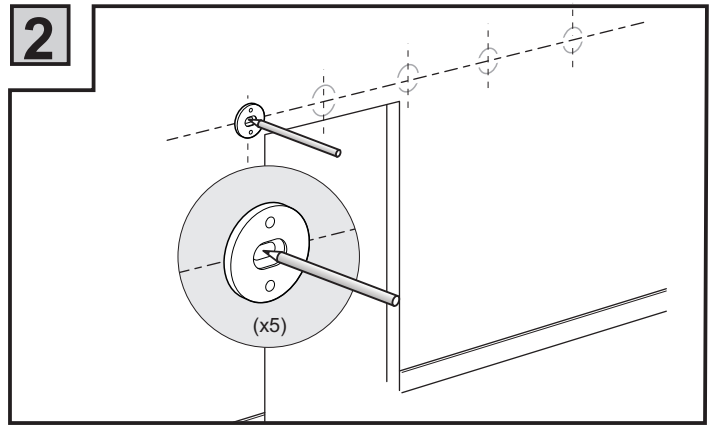

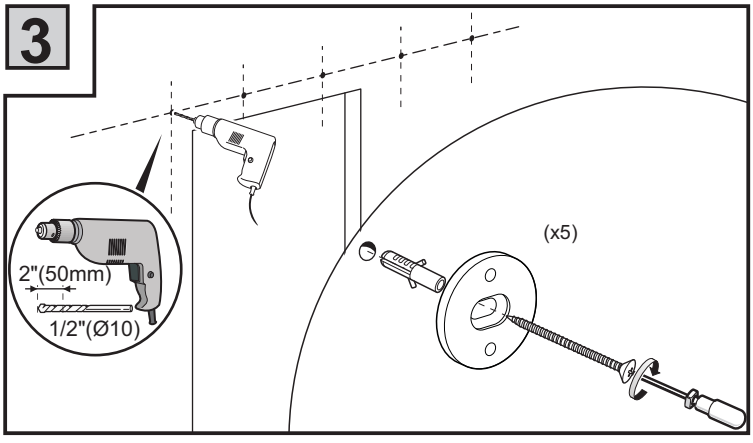

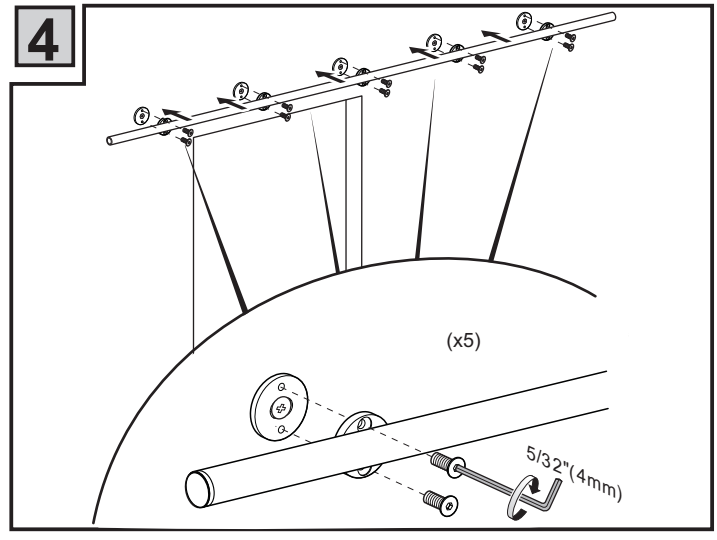

5

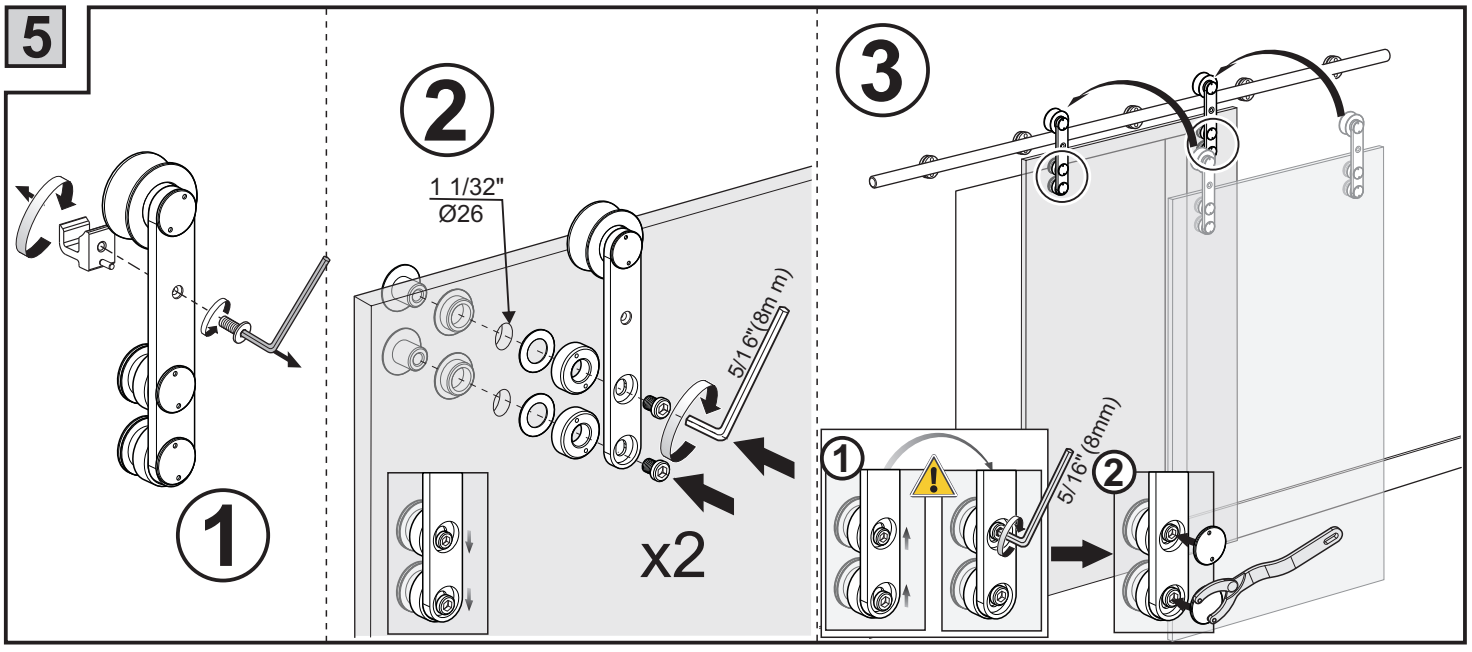
1
2
1 1/32"
Ø26
5/16"(8m m)
x2
3
1
5/16"(8mm)
2

6

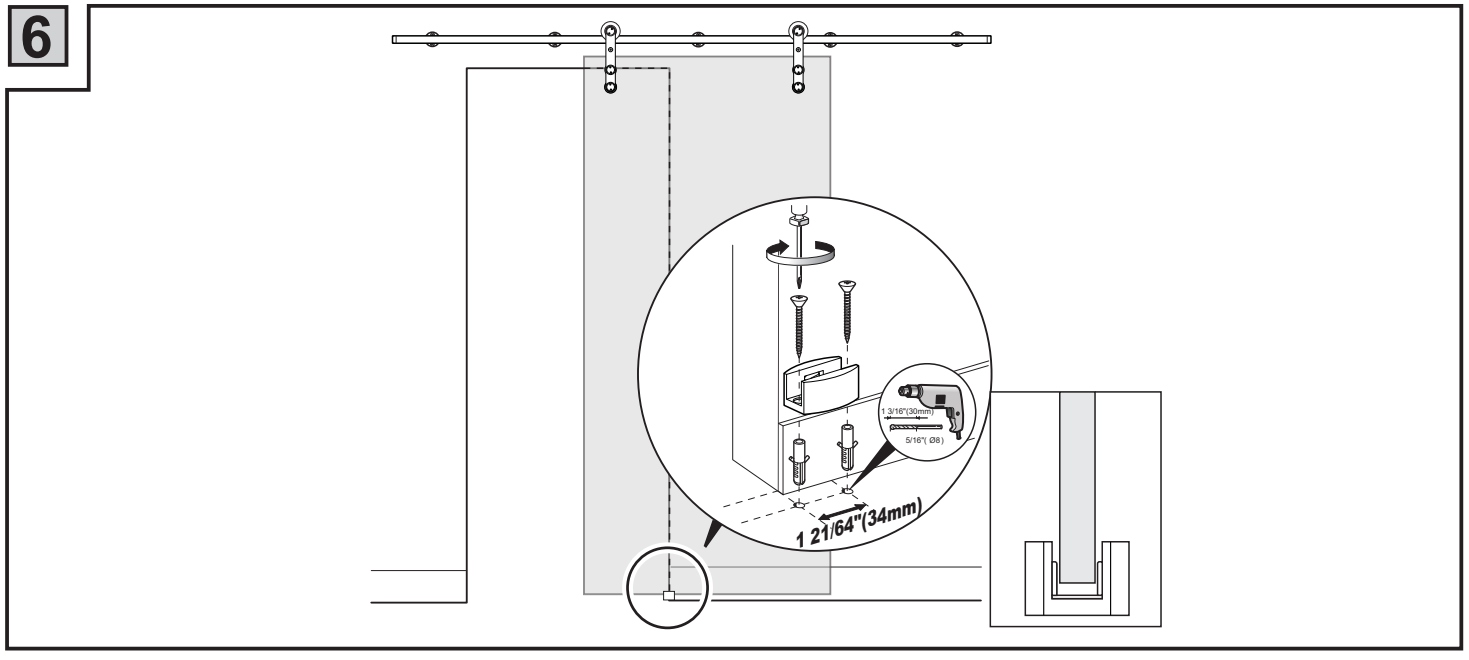
1 3/16"(30mm)
5/16"(Ø8)
1 21/64"(34mm)

7

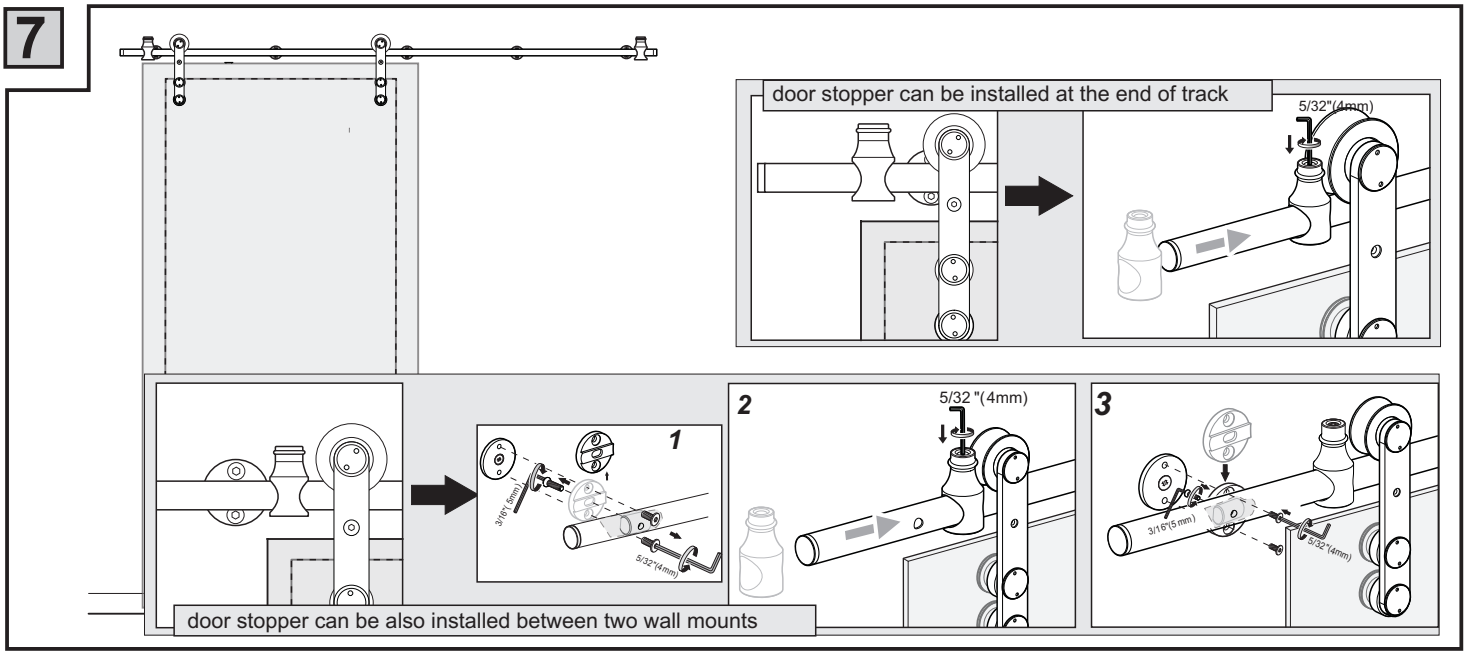
door stopper can be installed at the end of track
5/32"(4mm)
1
3/16"(5mm)
5/32"(4mm)
2
5/32 "(4mm)
3
3/16"(5 mm)
5/32"(4mm)
door stopper can be also installed between two wall mounts

8

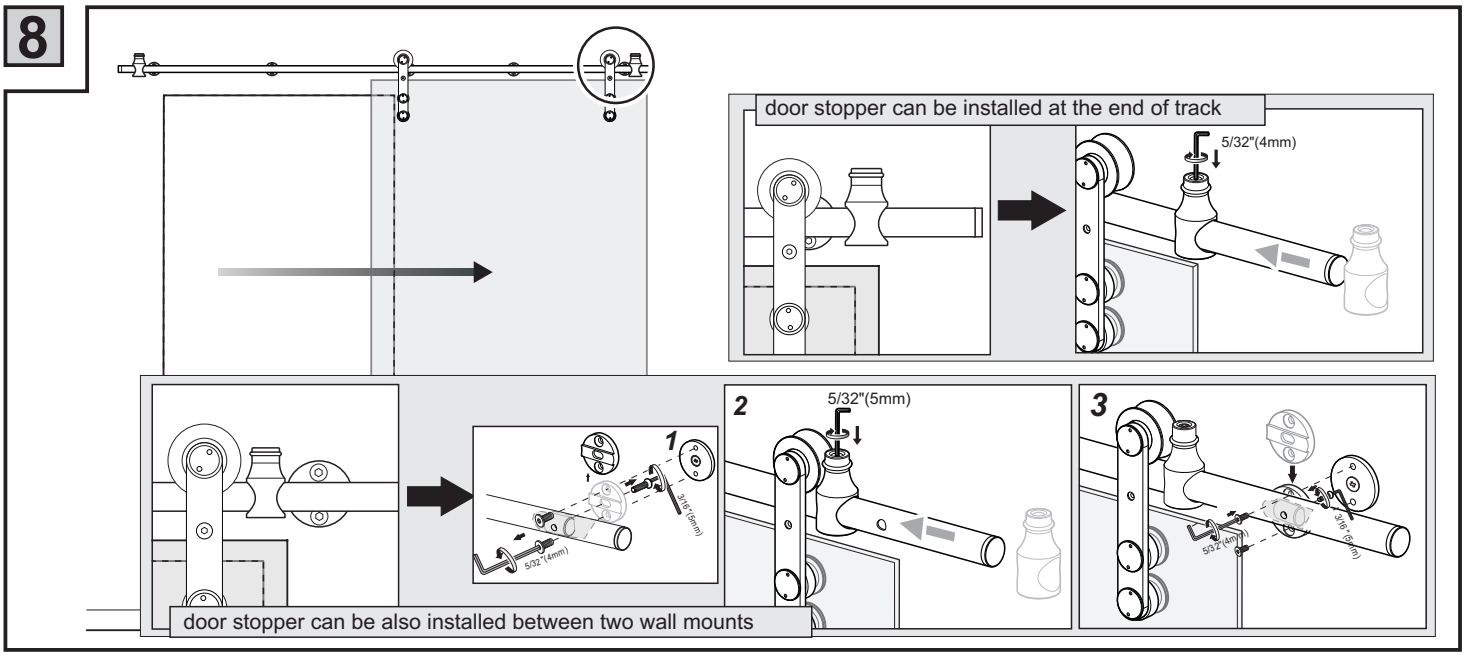
door stopper can be installed at the end of track
5/32"(4mm)
1
3/16"(5mm)
5/32"(4mm)
2
5/32"(5mm)
3
5/32"(4mm)
3/16"(5mm)
door stopper can be also installed between two wall mounts

9

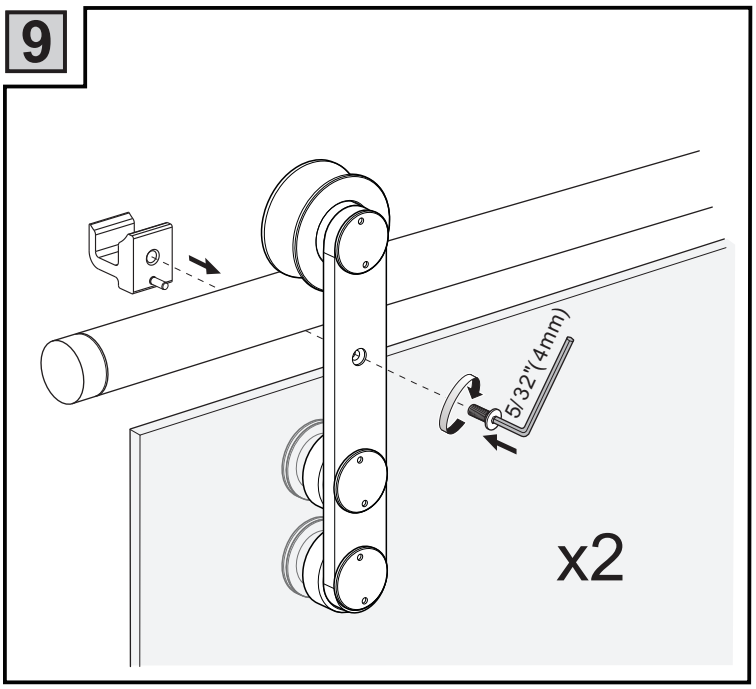
5/32"(4mm)
x2

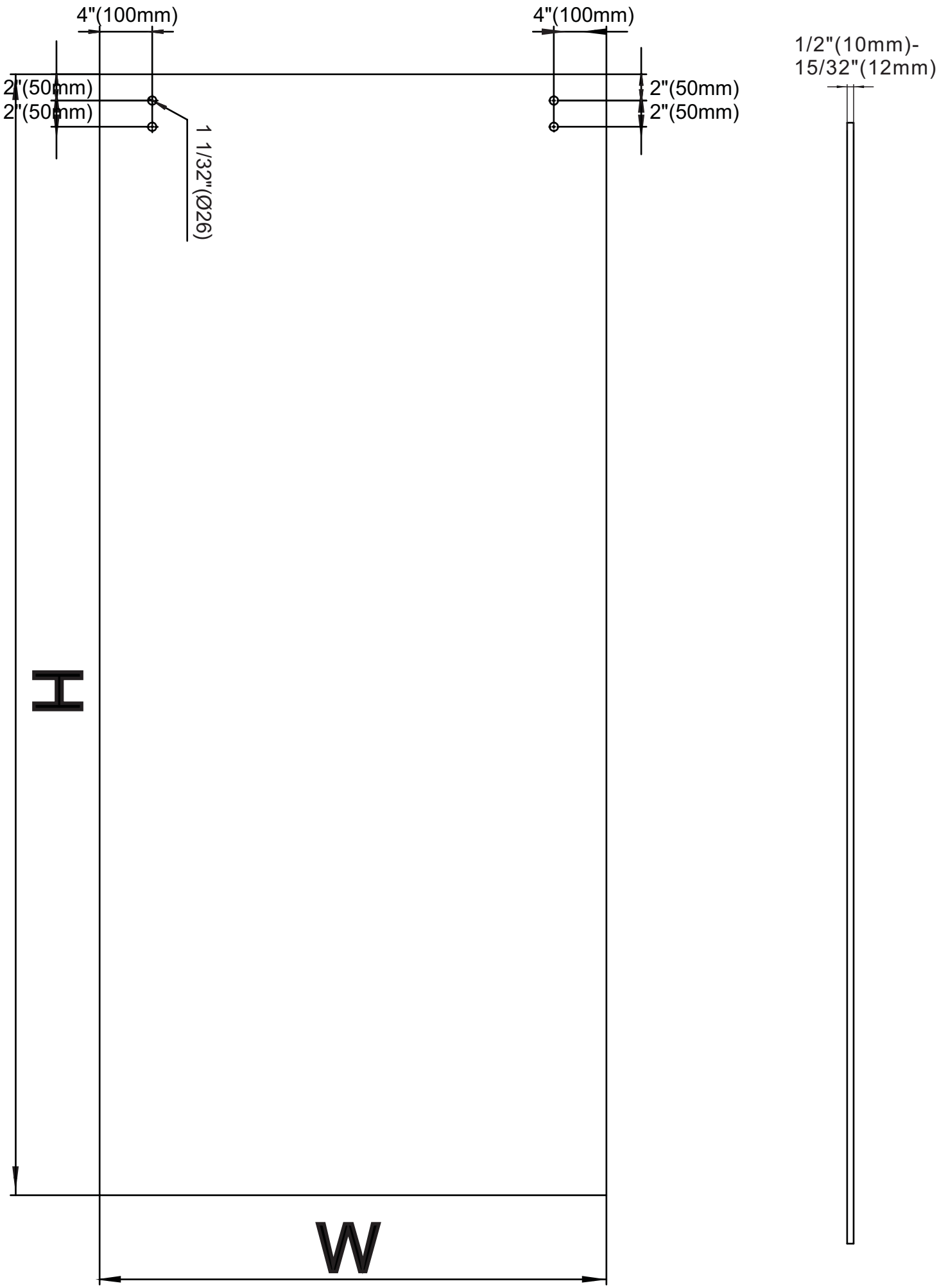
4"(100mm)
4"(100mm)
1/2"(10mm)-
15/32"(12mm)
2"(50mm)
2"(50mm)
2"(50mm)
2"(50mm)
1 1/32"(Ø26)
H
W