CH04, Cylindrical Single Coat Hook with Base

Features

Individually poly-bagged
Packed with screws
Round Base
Concealed Mounting

Material

Stainless Steel

Dimensions

Projection: 1 5/8"
Overall Height: 1 1/16"
Base Width: 1 3/8" diameter
Material Thickness: 9/16" diameter

Finish

US32D - Satin Stainless Steel

Code Compliance

Conforms to ANSI/BHMA A156.16
L032121 L03122 L03123

Packaging

Box Quantity: 25
Case Quantity: 250



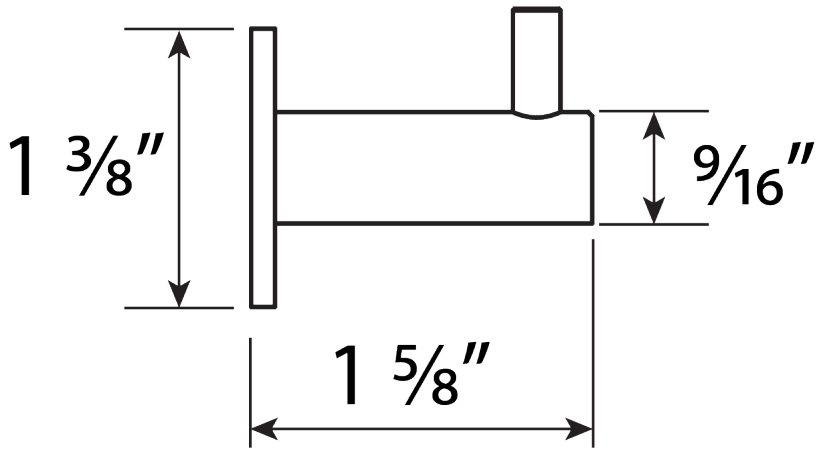

CAL-ROYAL PRODUCTS, INC.
6605 Flotilla St., City of Commerce, CA 90040 U.S.A.
Phone: (323) 888-6601 ● (800) 876-9258 ● Fax: (323) 888-6699 ● (800) 222-3316
Email: sales@cal-royal.com ● Website: www.cal-royal.com

The illustration and technical description in this cut sheet is current as of the date in the version date on the right. Cal-Royal Product reserves the right to, and may, on occassions, make changes and/or improvements in designs and dimensions without prior notice.

(BHC-7108-22/23-1of1)
2025 (YEAR PRINTED) 02 (VERSION NO.)

© Cal-Royal Products, Inc. 2025