Installation Manual for SCSBDH3180

CAL-ROYAL PRODUCTS, INC. USA

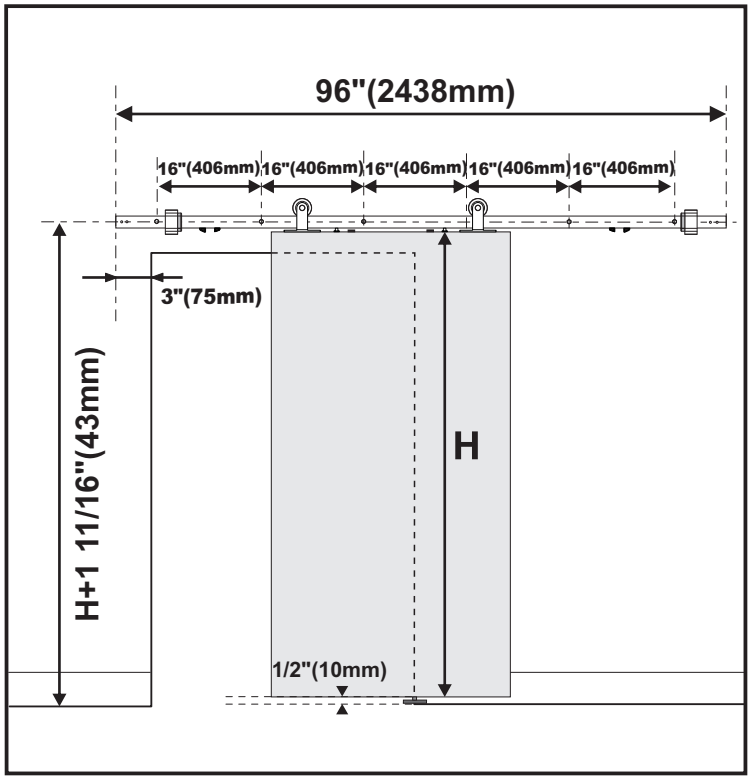

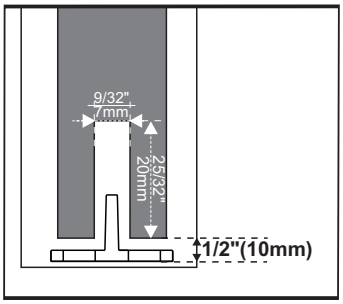

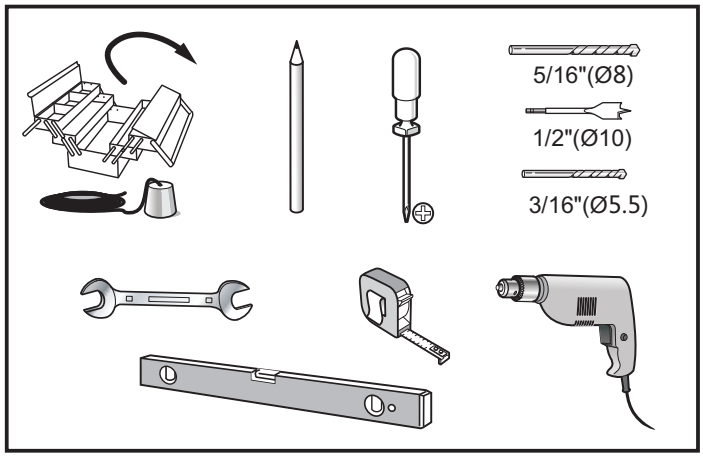

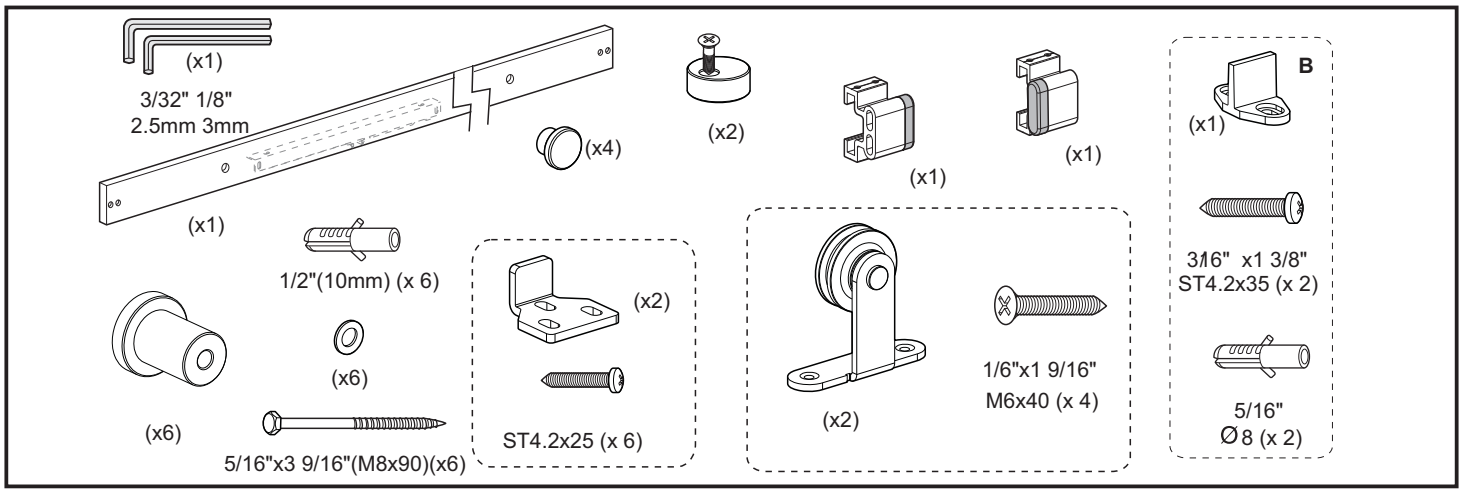

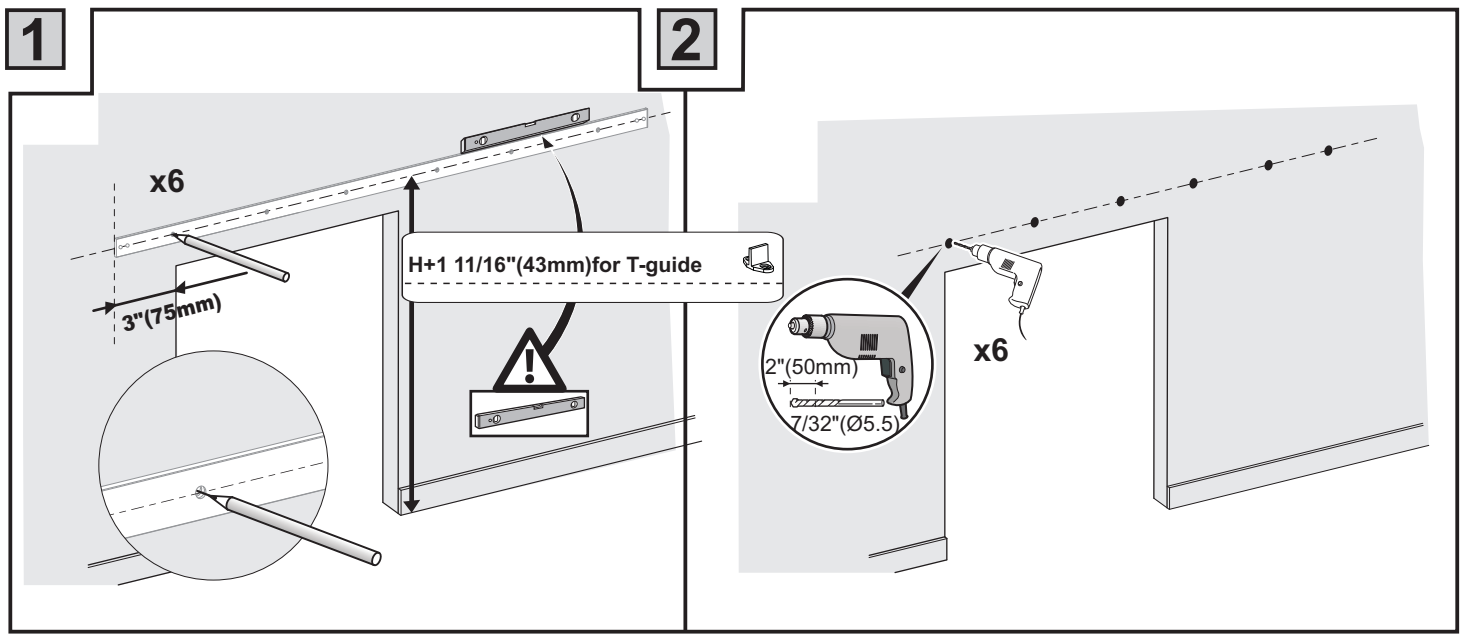

3

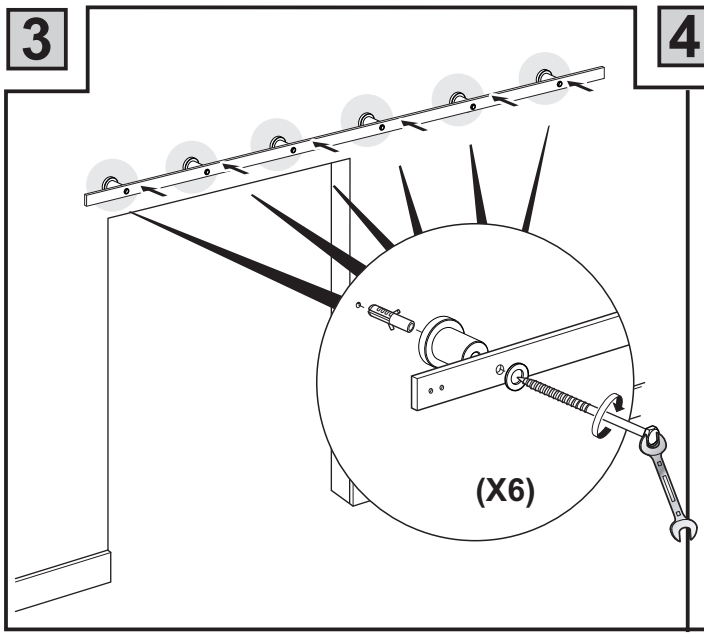
(X6)

4

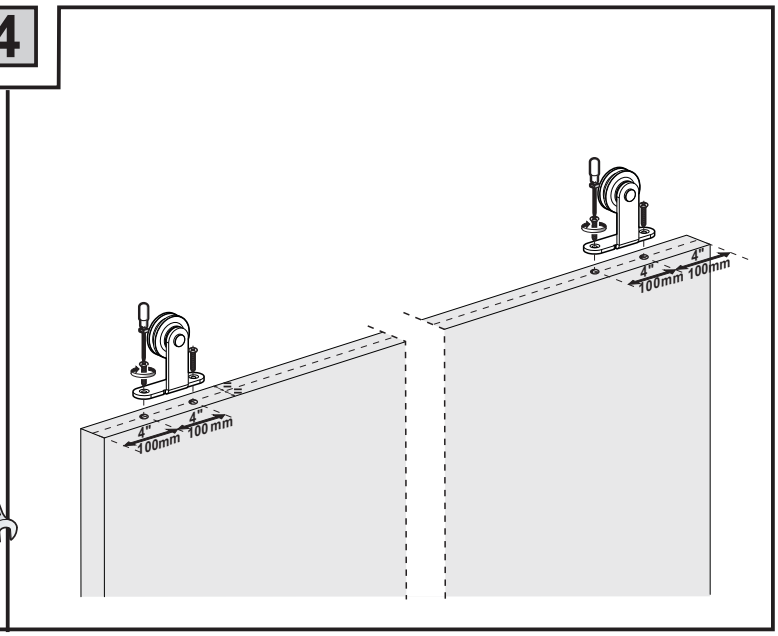
4"
100mm
4"
100mm
4"
100mm
4"
100mm

5

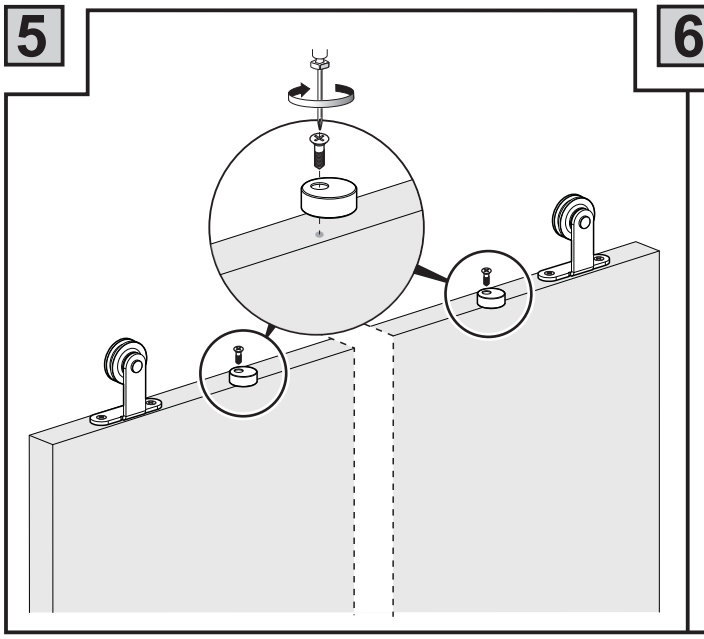

6

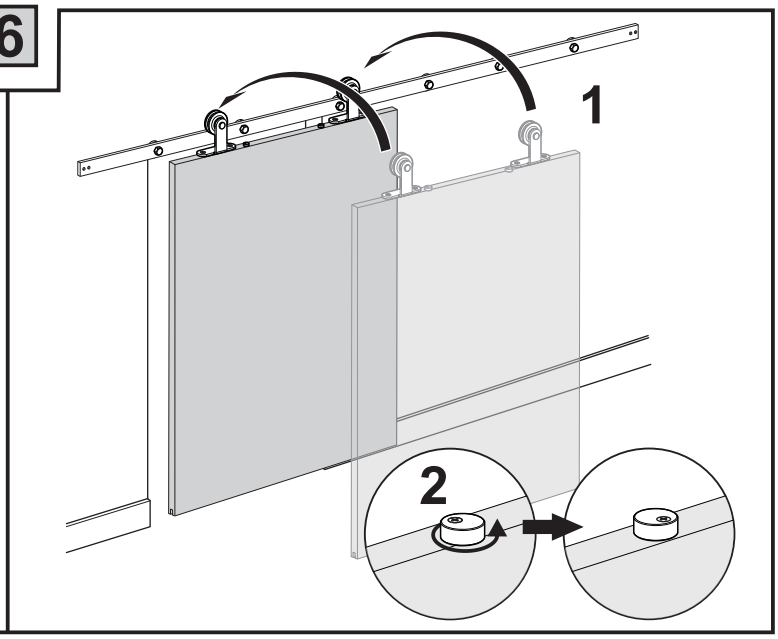
1
2

7

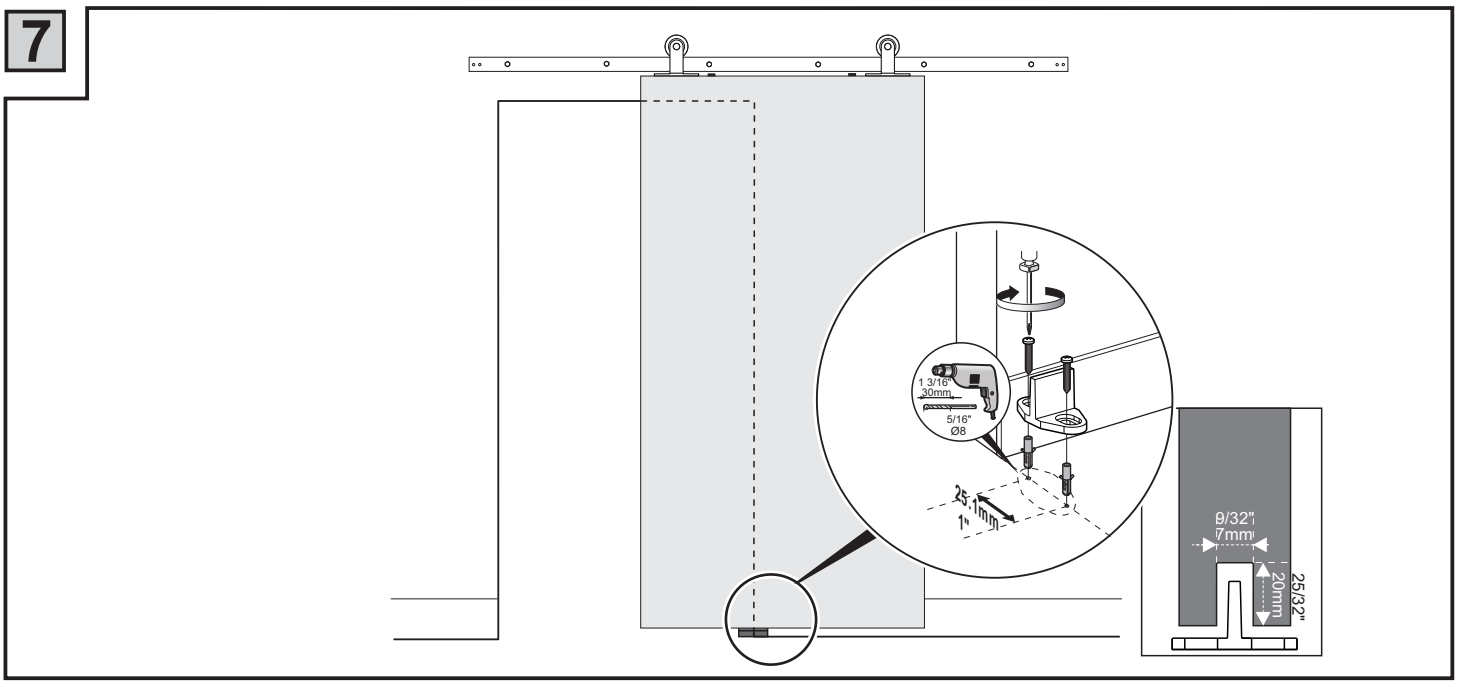
1 3/16"
30mm
5/16"
Ø8
25.1mm
1"
9/32"
7mm
20mm
25/32"

8

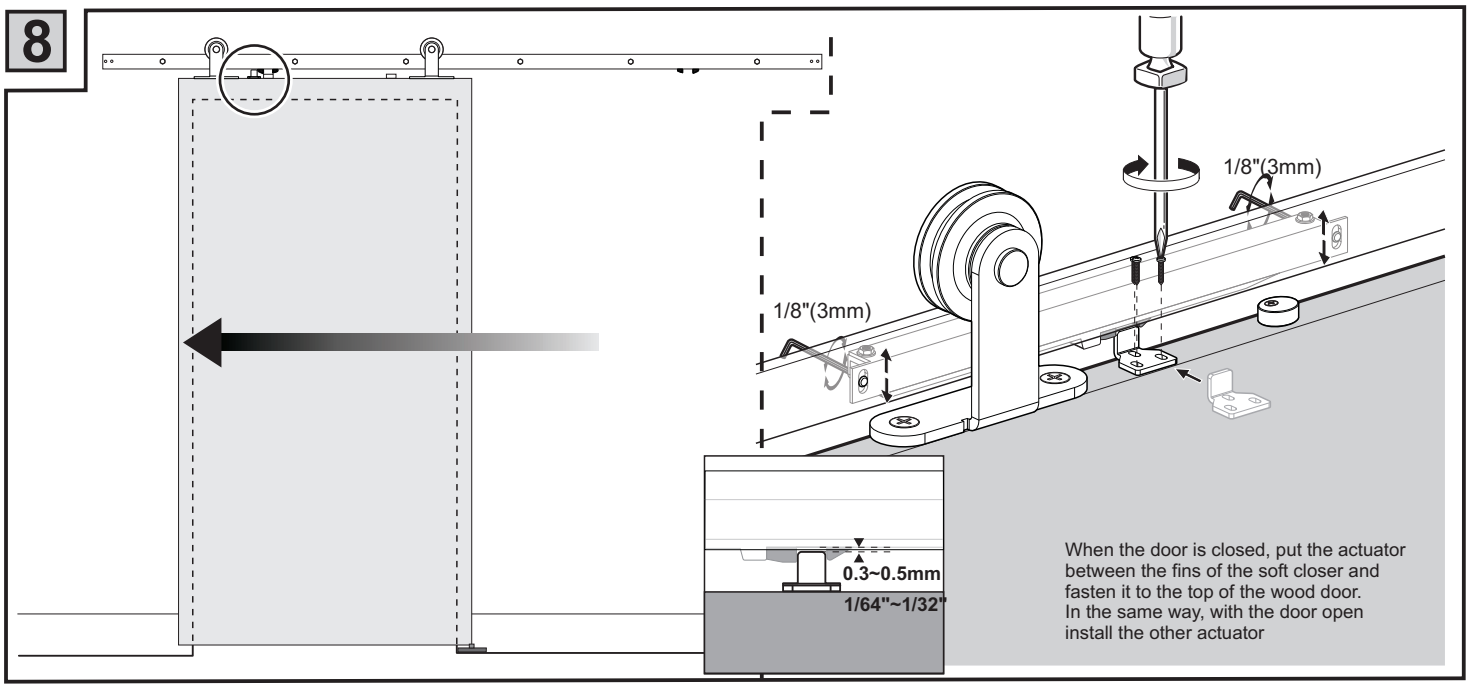
1/8"(3mm)
1/8"(3mm)
0.3~0.5mm
1/64"~1/32"
When the door is closed, put the actuator between the fins of the soft closer and fasten it to the top of the wood door.
In the same way, with the door open install the other actuator

9

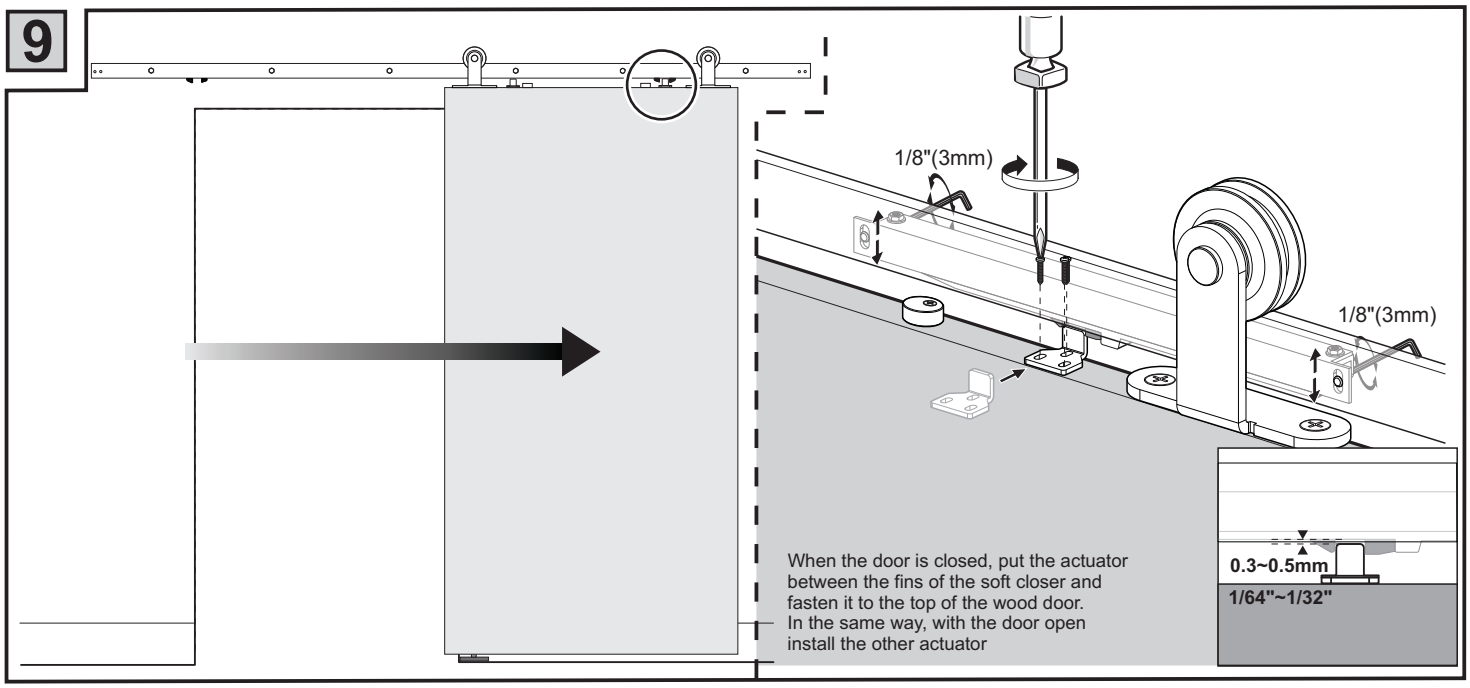
1/8"(3mm)
1/8"(3mm)
0.3~0.5mm
1/64"~1/32"
When the door is closed, put the actuator between the fins of the soft closer and fasten it to the top of the wood door.
In the same way, with the door open install the other actuator

10

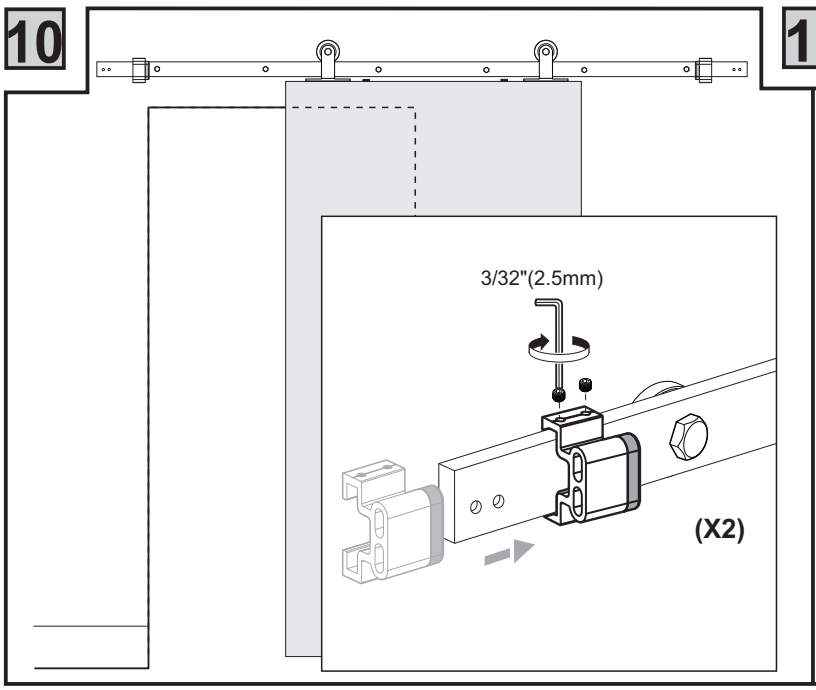
3/32"(2.5mm)
(X2)

11

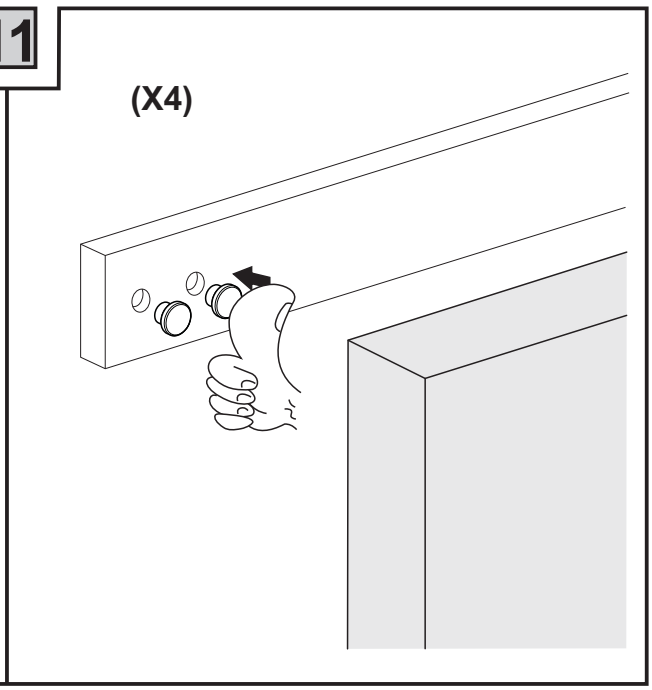
(X4)