CAL-ROYAL PRODUCTS, INC.
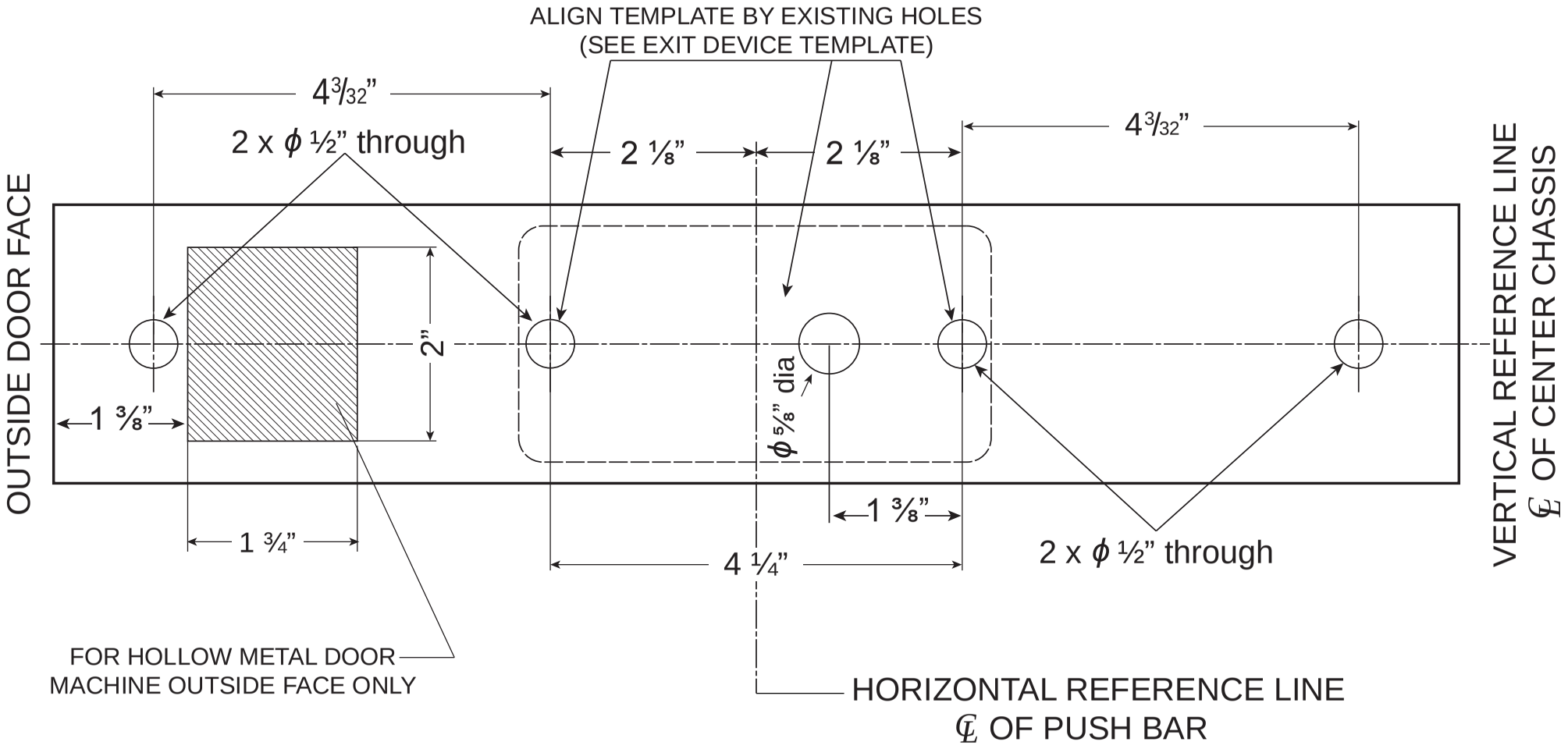
TEMPLATE FOR THP40
USED WITH 2200 RIM AND VERTICAL ROD EXIT DEVICES